Installation Instructions

718198

2025 - 2027 RAM 1500
3.0L Turbo I6 Engine SO/HO

Installation requires moderate mechanical skill. If this job is beyond your abilities, seek the services of a qualified technician.

If you do not understand any part of these instructions, please call Flowmaster Technical Support at (866) 464-6553 for assistance.

Apply penetrating oil generously to clamps, fasteners, pipes, and hanger rods for ease of disassembly.

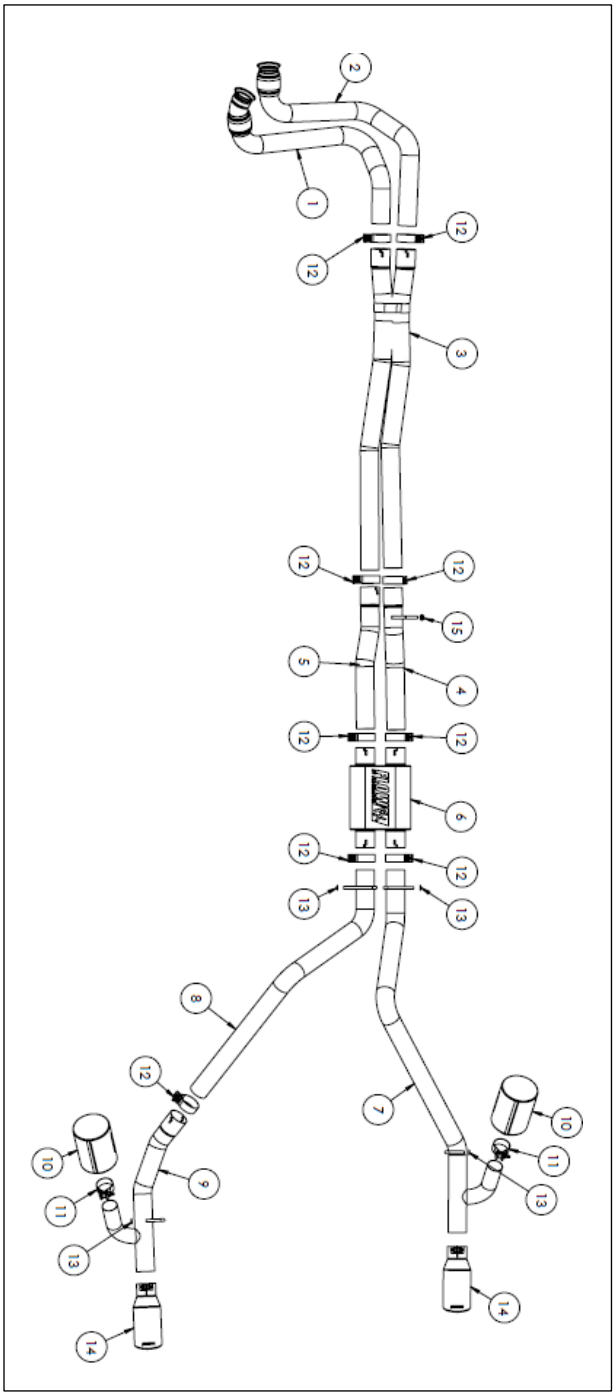

REVIEW THE INSTRUCTIONS & VERIFY THE KIT CONTENTS AND APPLICATION

Take a moment to read and understand these instructions before installing your Flowmaster exhaust kit.

ITM#	Part #	Description	Qty.
1	26994M	DOWN PIPE A	1
2	26995M	DOWN PIPE B	1
3	26993M	SCAVENGER PIPE	1
4	27007M	RIGHT MUFFLER INLET PIPE	1
5	27008M	LEFT MUFFLER INLET PIPE	1
6	72599-Z	3”IN (D) 3”out (D) FFX MUFFLER	1
7	27004M	RIGHT TAIL PIPE	1
8	26730M	LEFT OVERAXLE PIPE	1
9	27005M	LEFT EXIT PIPE	1
10	15213S	RESONATOR CAN	2
11	MC250BS	2.5” BAND CLAMP	2
12	MC300BS	3.0” BAND CLAMP	9
13	HW502	7/16 PUSH CLIP	5
14	St509B	4.5” Black Tip	2

Use the parts drawing and list to identify components and verify your kit’s contents. In the unlikely event that any parts are missing, please contact Flowmaster Technical Support for

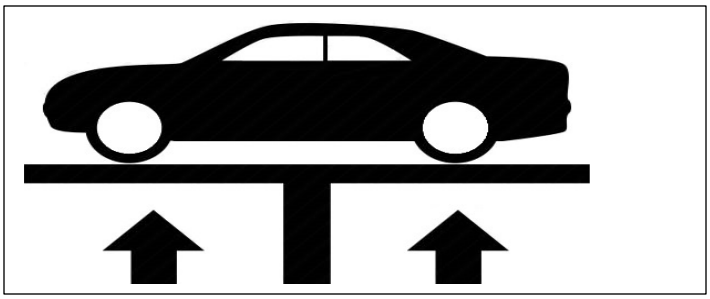

Vehicle Compatibility

Model Year: **2025 -2027**
Make: **RAM**
Model: **1500**
Engine: **3.0L Twin Turbo I6**

- **Standard Output or High Output Engine**
- **All Wheel Bases**
- **Will Not Fit RHO**

BEFORE STARTING:

Raise the vehicle to a minimum of eighteen inches. A floor hoist is ideal. If no hoist is available, we strongly urge the use of axle stands as a safety measure. **Please read and understand these instructions and disclaimer in their entirety before attempting installation.**

CAUTION! WORK ONLY ON A LEVEL SURFACE. USE JACKS /JACK STANDS OF SUFFICIENT CAPACITY TO LIFT AND SUPPORT YOUR VEHICLE. NEVER WORK UNDER A VEHICLE SUPPORTED BY A FLOOR OR BUMPER JACK

Removing the OEM Exhaust:

NOTE: Cutting the factory exhaust is not necessary but will simplify the removal of the muffler and left tail pipe. Please read and follow all the instructions before attempting to install this exhaust system

Parts and tools you may need: Duckbill Snap ring Pliers: **Lisle PN:44900**
OEM Replacement downpipe gasket and clamp set: **PN: 68521428AB**

Removing the OEM Muffler Assembly

1. Support the exhaust assembly before making cuts or removing any rubber hangers.
2. Cut the left (Drivers Side) tail pipe at the location in **Fig. 1/ Fig. 2**
   - Measure from the clamp mark closest to the bend on the tailpipe and make a witness mark at 3 1/4”
     Fig.2 **Note : This cut can be made anyplace after the muffler , Cutting at this location will make returning the factory exhaust a simple task with a band clamp if it’s required later.**
   - Wrap masking tape around the pipe at the mark to use as a straight edge for making a clean cut.
   - Cut the pipe at the mark, following the tape edge as you go. Remove the left tail pipe assembly.

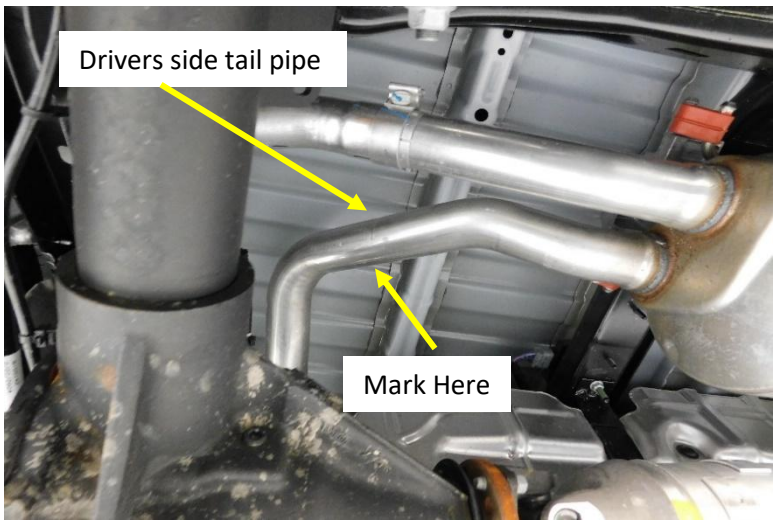

Figure.1

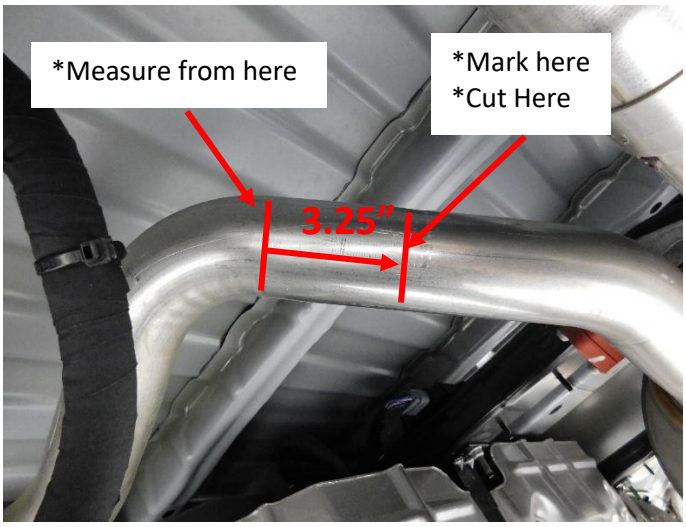

Figure.2

Removing the OEM Muffler Assembly Cont'd

3. **H.O** - Remove the (2x) bolts and (2x) nuts at the Muffler inlet pipe flanges. **Fig. 3**
   S.O – Remove the (2x) bolts at the muffler inlet pipe flange.
4. Loosen the Clamp on the right tail pipe connection just before the axel and spray the slip connection with penetrating oil. **Fig.3**
5. Spray the isolators with penetrating oil.
6. Work the right tail pipe off the muffler assembly.
7. Remove the (2x) 13mm nuts securing the muffler hanger bracket to the frame at the rear of the Muffler. **Support the Muffler!**
8. Remove the isolator from the right muffler inlet pipe before the muffler
9. Remove the Muffler assembly from the vehicle

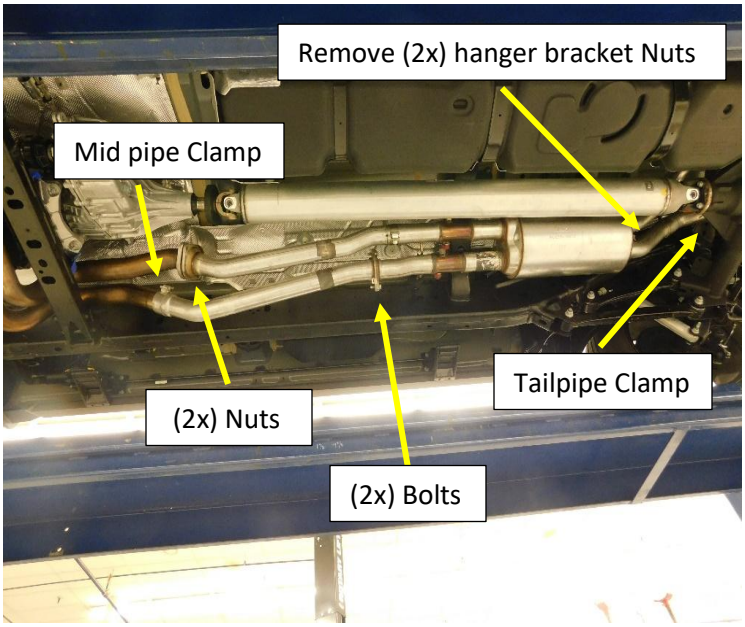

Figure.3 (H.O Shown)

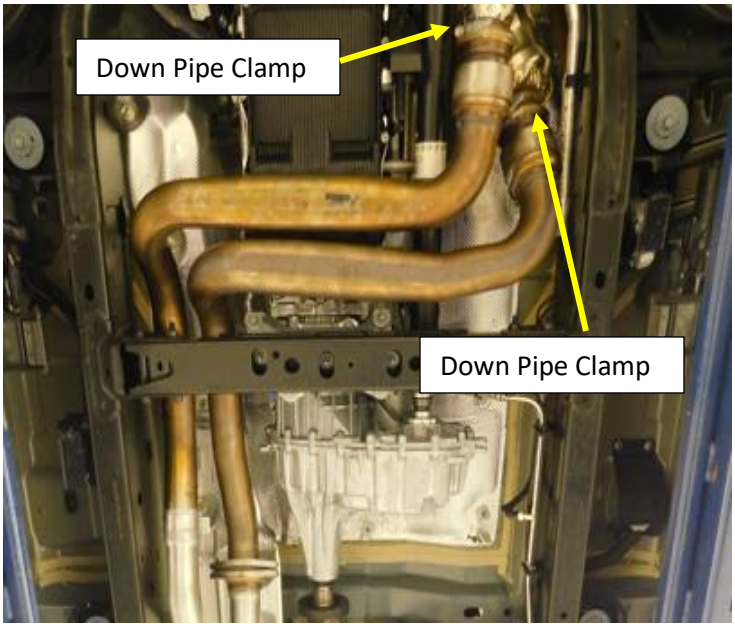

Figure.4 (H.O Shown)

10. Remove the mid pipe from the down pipe assembly. **Fig.3**
    H.O - Loosen the clamp and remove the right mid pipe
    S.O - Loosen the nuts on the flange at the Y pipe assembly and remove the mid pipe.
11. Remove the nuts from the clamps on the down pipe connection at the catalytic converter using a Ratcheting 16mm wrench. Remove the bolt and alignment spacer. **Fig.4**
    Note: Spray the threads on the bolt with penetrating oil at the clamp and nut to assist with removal.
12. Use Duckbill lock ring pliers to expand the clamps **(Lisle PN:44900 Example)**
13. Expand the clamps and push them off the downpipe flanges towards the catalytic converters leaving the thin metal gasket attached to the flange. **Caution**: THESE GASKETS ARE VERY THIN AND FRAGILE -BE VERY CARFUL NOT TO DAMAGE THEM.
    Note: OEM Replacement clamp and gasket set if needed: **Part Number – 68521428AB**
14. Carefully remove the metal gaskets from the OEM down pipe flanges and save for reuse.
15. Remove the rear hanger assembly and Isolators from the OEM muffler and save for reuse.
16. Remove the isolator from the OEM muffler inlet pipe and re-install it on the frame hanger rod.

Install your Flowmaster Exhaust System

Before installing clamps

Remove their lock nuts, apply anti-seize compound to the bolt threads, and re-install the nuts.

Important: Trimming of the Scavenger pipe is required to match the wheelbase of the vehicle it's being installed on. If trimming of the Scavenger pipe is required, measure from outlet end and mark each tube for correct length. **Figure.5**

Scavenger Pipe Trim requirement - Reference Chart

Wheelbase	Body Style	Bed Length	Trim Requirement
140.0"	Double cab	6' 4"	14.0"
144.5"	Crew Cab	5' 7"	9.5"
153.5"	Crew Cab	6' 4"	NA

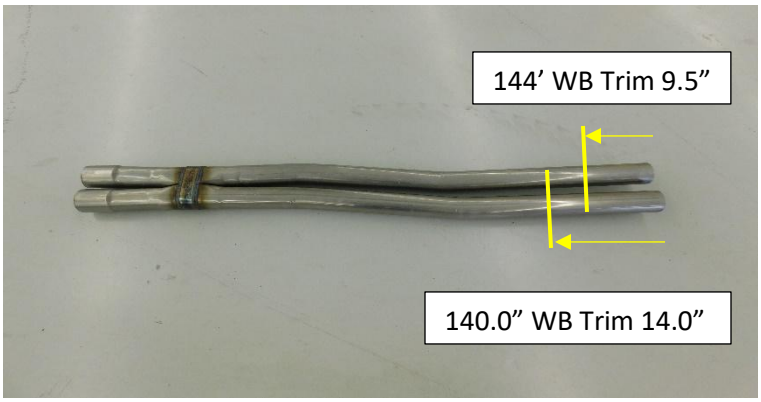

Figure. 5

718198 Installation Cont'd

1. Install the OEM Down pipe gaskets on to the Flowmaster down pipe flanges as seen in **Fig. 4**.
   Note: It may be necessary to carefully bend the small ears back just enough to get them over the lip of the flange. Bend the ears back on to the flange to lock it on. **Fig.4**

ATTENTION : If you are replacing the production gasket with the replacement **Clamp and Gasket set PN: 86521428AB** , note the difference in its design from the production Gasket and Clamp. The replacement parts come as one assembly and are installed as an assembly on to the Flowmaster down pipe flange (DO NOT DISASSEMBLE IT). The small locking tangs must be over the outside of the flange lip or the assembly will not lock onto the downpipe flange and the gasket will not seat correctly on the inside of the flange. **See Figures 5,6** The assembly should be installed on to the down pipes as seen in **Figure.7**

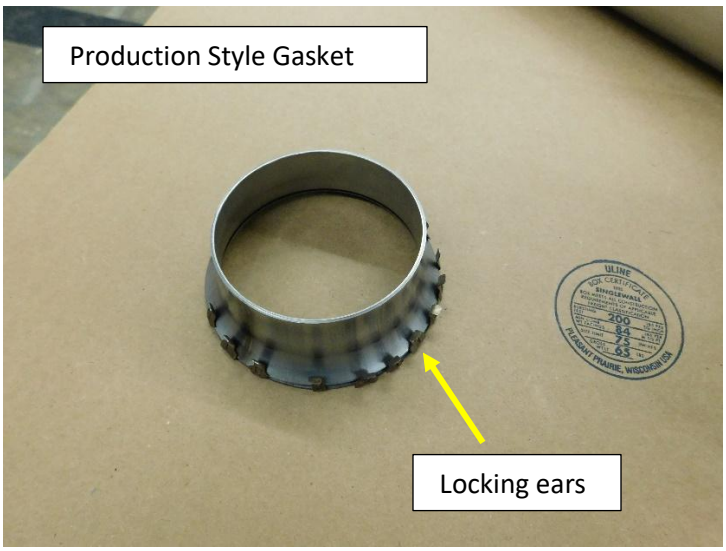

Figure.4

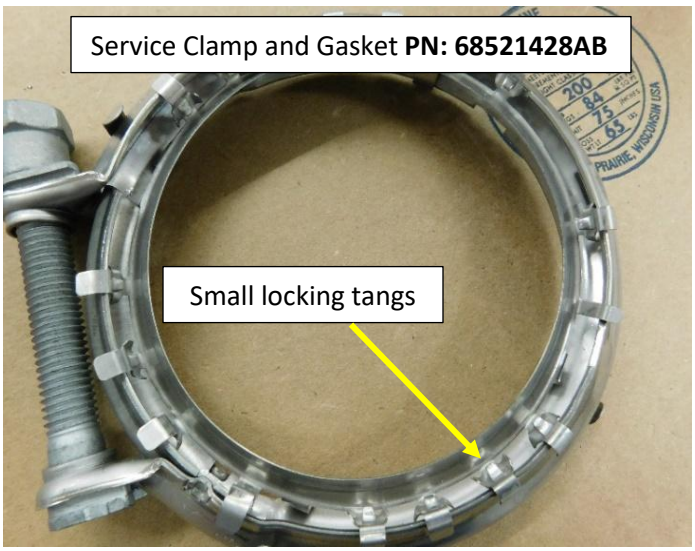

Figure.5

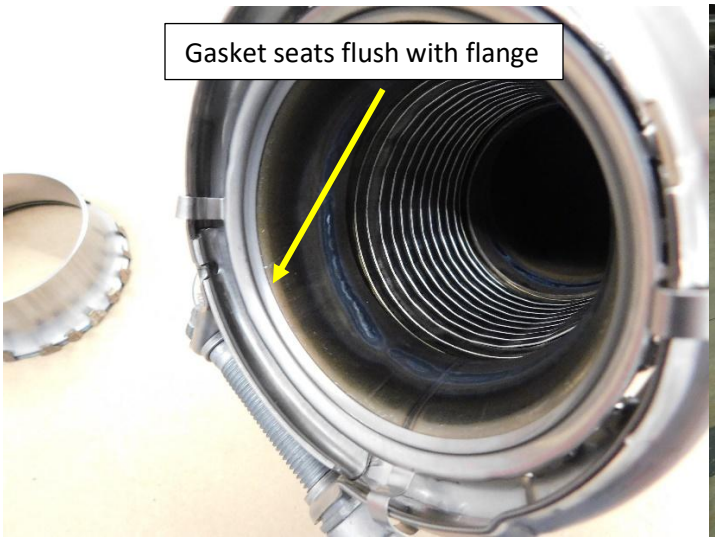

Figure.6

Figure.7

718198 Installation Cont'd

Installing the Down Pipes

2. Install Flowmaster down pipe "A" with the outlet end on top of the transmission crossmember and the inlet flange with the gasket on to the catalytic converter outlet. **Fig.9**
3. Expand the production clamp with the Lock ring pliers and install from the catalytic converter on to the inlet flange while holding the flange against the catalytic converter. The clamp should be fully over the flange lip but **not** be over the locking ears of the gasket. **Fig.8**
4. Install the Bolt, alignment spacer (with the notch toward the clamp) and nut. Tighten the clamp to hold the down pipe in place but allow for adjustment. **Fig.8**
5. Repeat the process with the Flowmaster down pipe "B". **Fig.9**

Note: If you are using the Service Clamp and Gasket set **PN:68521428AB**. It will not be necessary to use the lockring pliers to expand the clamp to install. The clamp is ready to install once pressed onto the down pipe inlet flange, it will just need to be tightened when it is in place on the catalytic converter.

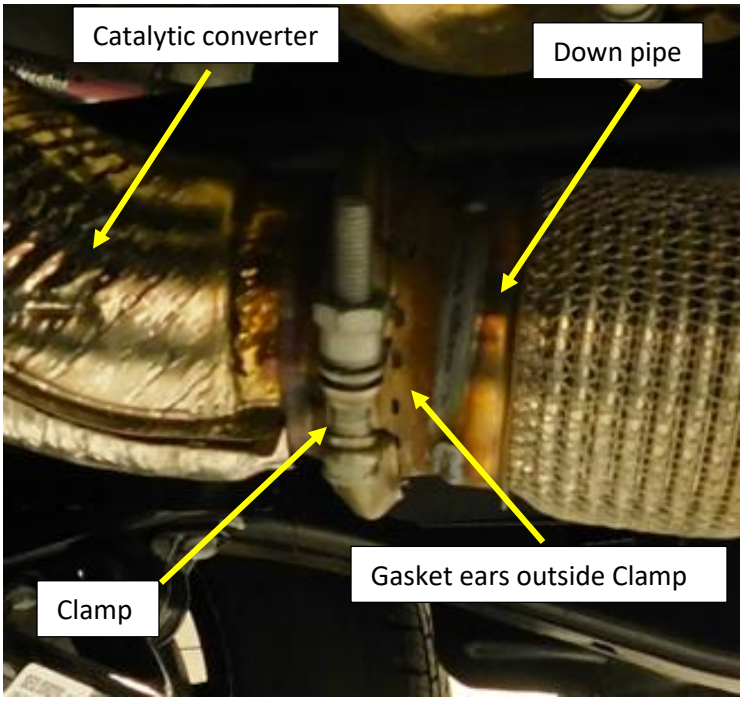

Figure.8

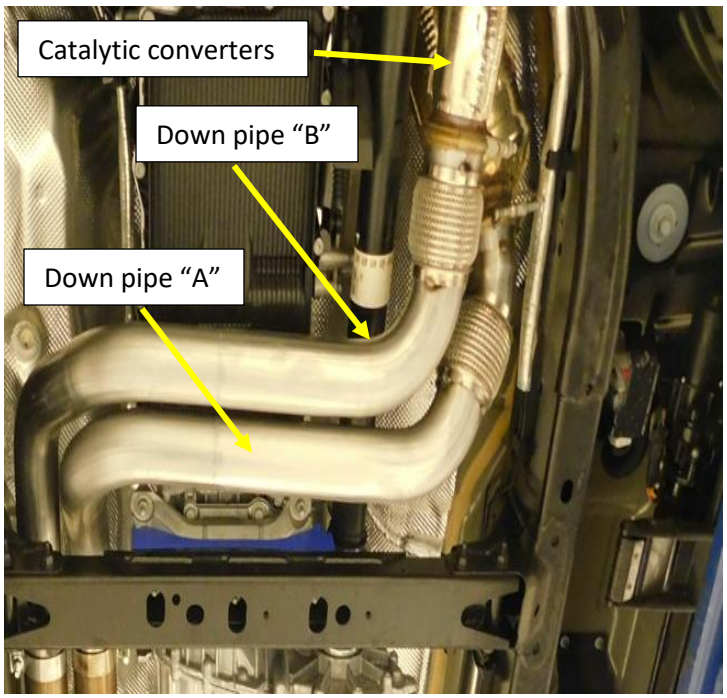

Figure.9

718198 Installation Cont'd

Installing the Scavenger Pipe- (See trim requirements on page.4)

6. Install a 3" band clamp (12) on to each expanded and notched end of the Scavenger pipe (3) with the bolts to the outside of the pipe and nuts facing the ground. **Fig.10**
7. Install the scavenger pipe (3) (after trimming to length if necessary) on to the down pipes with the Flowmaster logo towards the ground. Support the assembly. Tighten the clamps to allow for adjustment. **Fig.10**

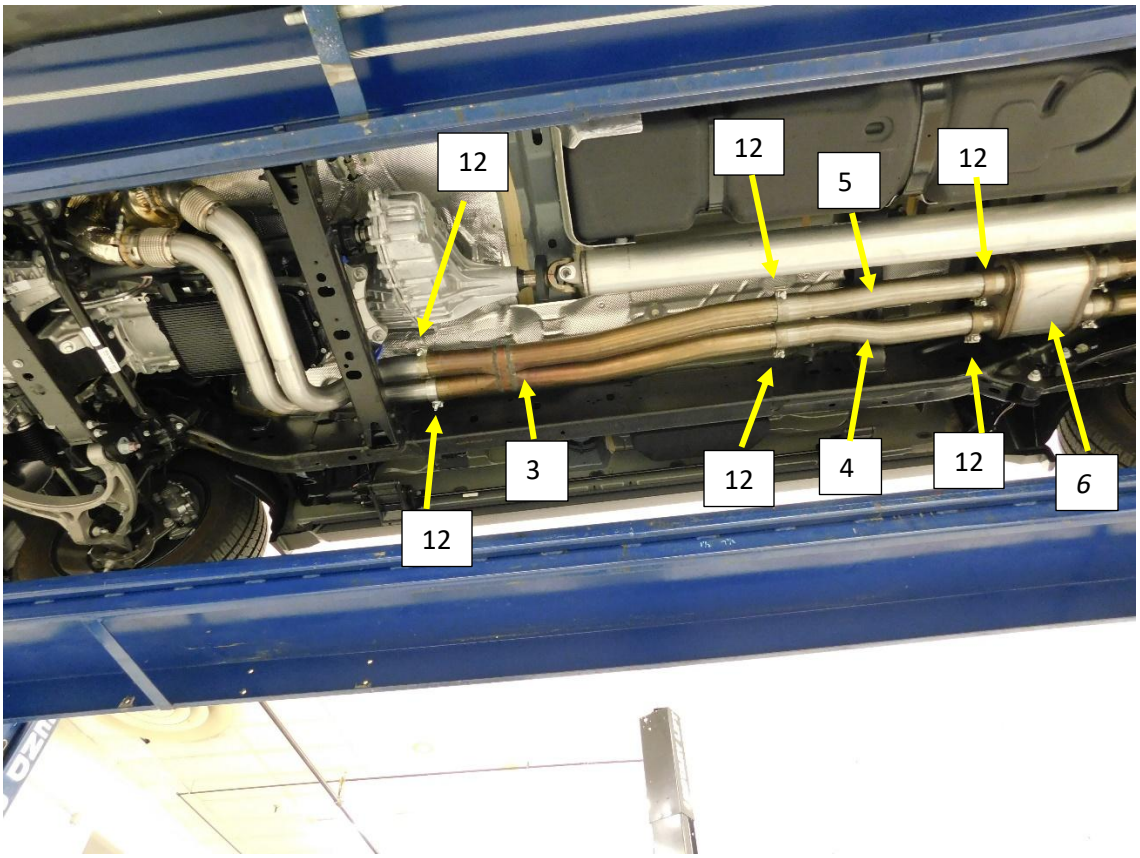

Figure.10

8. Install a 3" band clamp (12) on to the expanded and notched end of each of the Right (4) and Left (5) muffler inlet pipes. **Fig.10**
9. Install the right muffler inlet pipe (4) on to the Scavenger pipe (3) and install the hanger rod into the Isolator on the frame. Tighten the clamp to allow for adjustment. **Fig.10**
10. Install the left muffler Inlet pipe (5) on to the Scavenger pipe (3), tighten the clamp to allow for adjustment. **Fig.10**
11. Install a 3" band clamp (12) on to each muffler (6) inlet neck with the bolt facing away from the drive shaft and nut facing the ground. Install the muffler (6) on to the muffler inlet pipes. Tighten the clamps to allow for adjustment. **Fig.10**

718198 Installation Cont'd

12. Install a 3" band clamp (12) on to each of the Muffler outlet neck. **Fig.11**
13. Install the OEM muffler hanger assembly (HA) on to the crossmember at the rear of the muffler using the original 13mm nuts removed previously. **Fig.11**
14. Install the Right tail pipe over the axle from the rear of the vehicle with the long hanger rod toward the muffler. **Note:** It may be necessary to remove the spare tire and right side heat shield.
15. Install the tail pipe into the muffler and install the hanger rod (HA) through the isolator. **Fig.11**
16. Install the rear tail pipe hanger rod (RH) into the isolator at the rear of the frame. **Fig12**
17. Install the Left-over axel pipe (8) with the hanger rod (HA) toward the muffler, feed the pipe over the differential and toward the rear of the truck. **Fig.11**
18. Install the hanger rod into the rubber isolator (HA), tighten the clamp to allow for adjustment. **Fig.11**

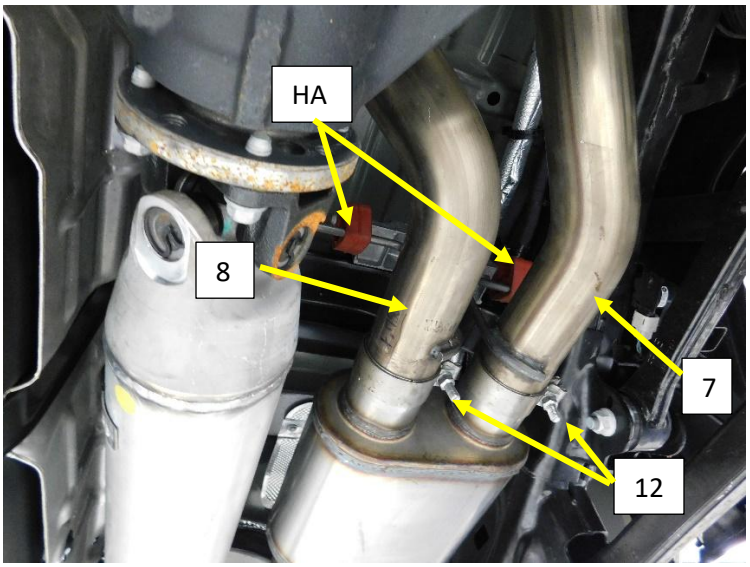

Figure.11

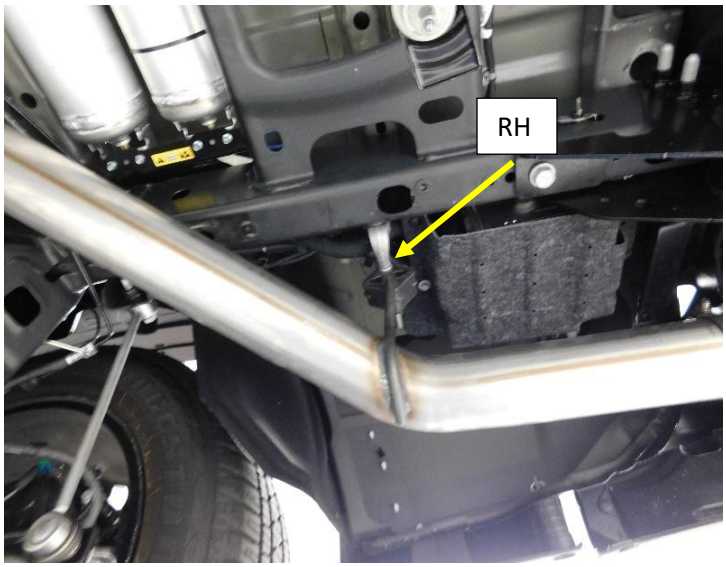

Figure.12

718198 Installation Cont'd

19. Install a 3" band clamp (12) on to the expanded end of the left Exit pipe (9). **Fig.13**
20. Install the left exit pipe (9) on to the outlet of the left-over axle pipe. **Fig.13**
21. Install the hanger rod (LH)into the isolator and tighten the clamp (12) to allow for adjustment.
22. Install a 2.5" band clamp (11) on to the inlet neck of both supplied resonator canisters (10).
23. Install the resonators on to the left exit pipe assembly (9) and right tail pipe (7). **Fig.13, Fig.14**
24. Position the resonator on the tube with the neck as far down the straight tube as possible but not into the bend. Tighten the 2.5" band clamp (11). **Fig.13, Fig.14**

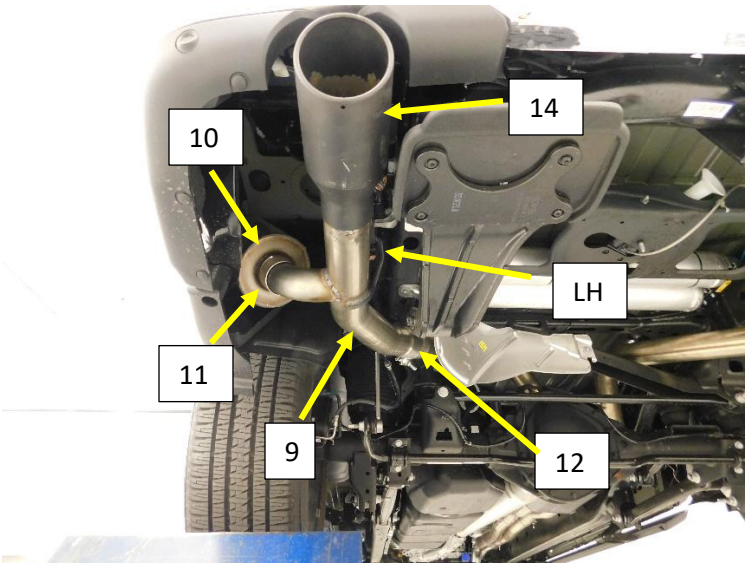

Figure. 13

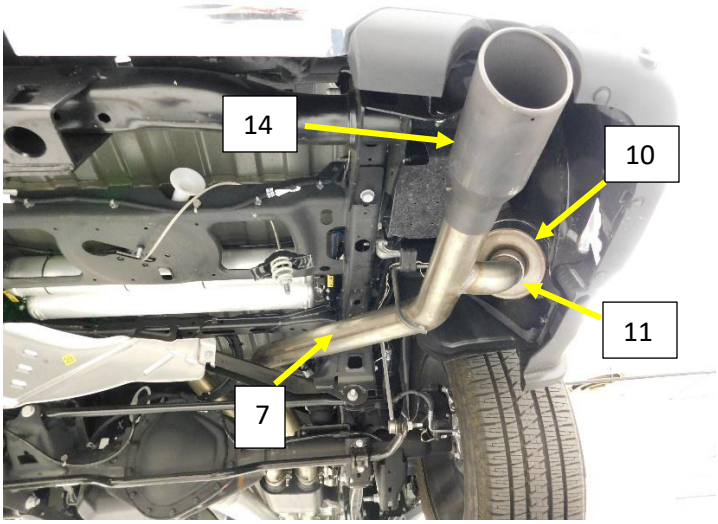

Figure. 14

25. Install the ST509B tips (14) and tighten the clamps to allow for adjustment.
26. Starting at the front of the system and work towards the rear, adjust the system for best alignment and component clearance, tightening the clamps as you go.
27. Make final adjustments to the tips as required and tighten the clamps.
28. Install the supplied push nuts (13) on to the hanger rods after alignment is completed.

Enjoy your Flowmaster Exhaust!