Installation Instructions

817936

2019*-2024, 2026-2027 RAM 1500
5.7L ENGINE
2/4 Wheel Drive & All Wheelbases

*New body only, does NOT fit 2019 Classic body RAM.

OVERVIEW:

1. Take a moment to read and understand these instructions before installing your Flowmaster performance system.

NOTE: Please inventory all parts now before continuing and if necessary, report any missing items to our tech line. This will avoid potentially stranding your vehicle until any missing replacement parts arrive.

ITM #	PART #	DESCRIPTION	QTY.
1	26748S	Inlet Pipe	1
2	26749S	Extension Pipe	1
3	8430155-Z	Muffler	1
4	26799S	Right Front Tailpipe	1
5	26800S	Left Front Tailpipe	1
6	26801S	Right Rear Tailpipe	1
7	26802S	Left Rear Tailpipe	1
8	26803S	Side Exit Pipe	2
9	26804S	Rear Exit Pipe	2

ITM #	PART #	DESCRIPTION	QTY.
10	ST462B	Black Tip	2
N/A	PK1030	Hardware Package includes:	1
11	HA1903	90° Isolation Hanger	2
12	MC300BS	3" Stainless Band Clamp	8
13	HW211	⅜-16 x 2 Bolt	2
14	HW103	⅜-16 Nut	2
15	HW303	⅜" Flat Washer	2
16	HW309	⅜" Lock Washer	2
17	HW502	7⁄16" Hanger Keeper	3

REMOVE STOCK EXHAUST SYSTEM:

2. Raise vehicle up on a hoist or rack to working height. If you don't have access to a hoist or rack, support vehicle with jack stands.

WARNING:
Avoid serious burns! Allow your vehicle time to cool completely before touching any factory engine components.

To ease preparation and installation of your new kit:

- Apply penetrating lubricant to mounts, bolts and clamps before you remove them.
- Use stands as necessary to support parts as you detach them from your vehicle and again as you install new parts.

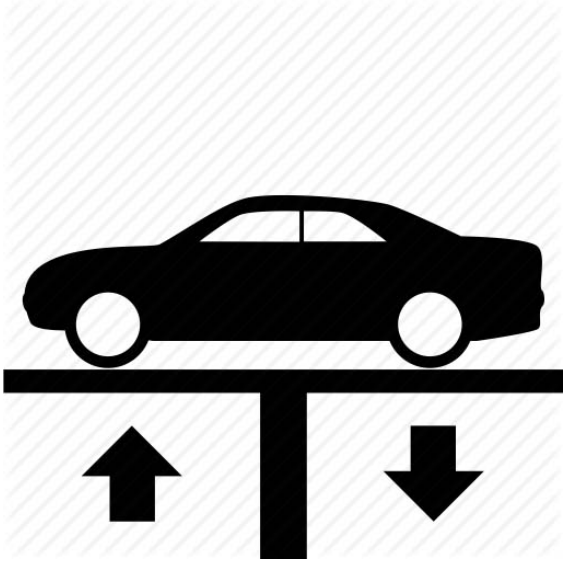

3. Remove passenger side tailpipe from vehicle by loosening clamp and dismounting wire hanger from stock mount.

4. Remove factory tailpipe from vehicle by cutting it near muffler outlet and dismounting wire hangers from factory mounts. Remove and retain tailpipe isolators for later use.

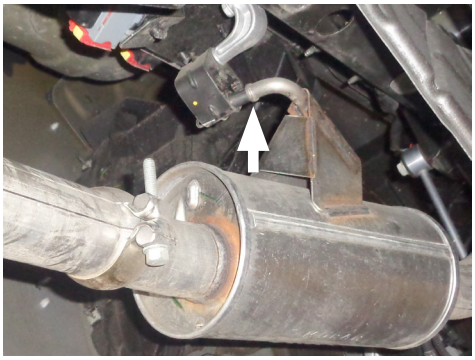

5. Remove factory muffler wire hangers (x3) from factory isolators and detach grounding wire.

6. Remove nuts from factory pipe and catalytic converter flange. Remove muffler and factory pipe from vehicle.

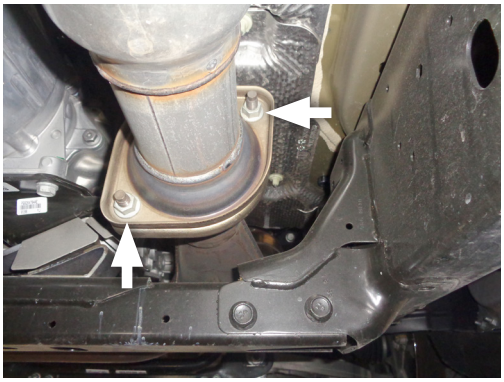

7. Remove stock studs from catalytic converter flange.

INSTALL FLOWMASTER EXHAUST SYSTEM:

8. Remove nuts from stock and Flowmaster clamps, apply anti-seize compound to bolts and re-install nuts.

NOTE: The image in this step is intended for illustrative purposes only and may or may not accurately reflect components included in your kit.

9. Find your vehicle within applications listed below, apply corresponding modifications to ensure it will install properly on your vehicle. Then connect **inlet pipe (1)** to catalytic converter oriented exactly as shown.

WB	BODYSTYLE	BED	INLET PIPE MODIFICATION:
154"	Crew Cab	6'4"	No modification required
145"	Crew Cab	5'7"	Trim 9" from inlet rear
141"	Quad Cab	6'4"	Trim 13" from inlet rear

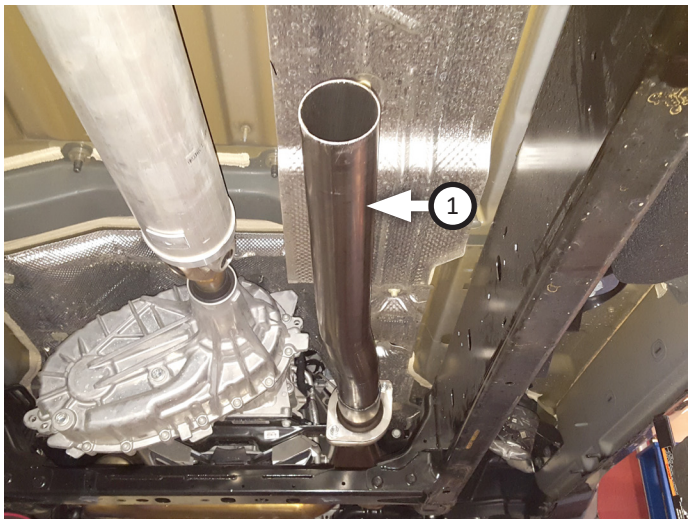

10. Fasten inlet with (x2 ea) **bolts (13)**, **flat washers (15)**, **lock washers (16)** and **nuts (14)**. Place **clamp (12)** onto **extension (2)** and connect it to inlet pipe. Insert hanger in isolator, tighten clamp and reclip ground wire.

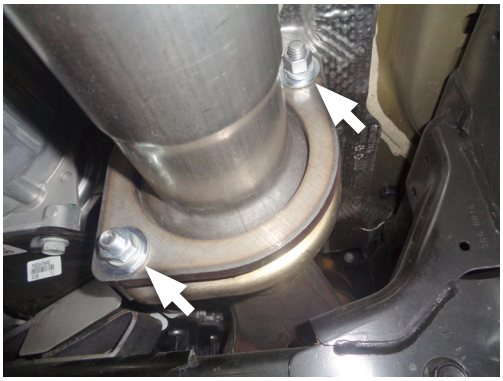

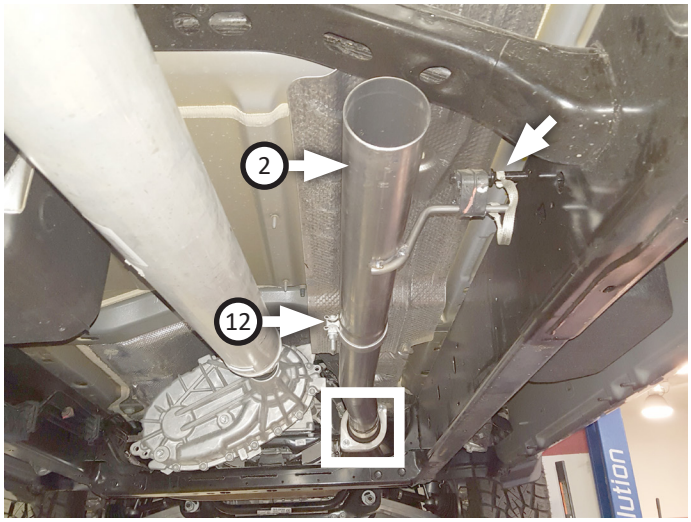

11. Place (x3) **clamps (12)** onto **muffler (3)** then connect it to extension pipe. Tighten front clamp just enough to allow for adjustment.

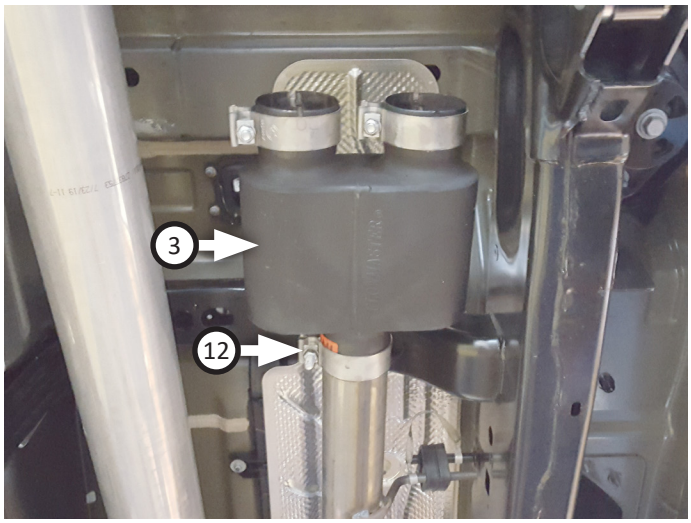

12. Route **right front (4)** and **left front (5) tailpipes** over axle then connect them to muffler. Insert their wire hangers into isolators then tighten clamps just enough to allow for adjustment.

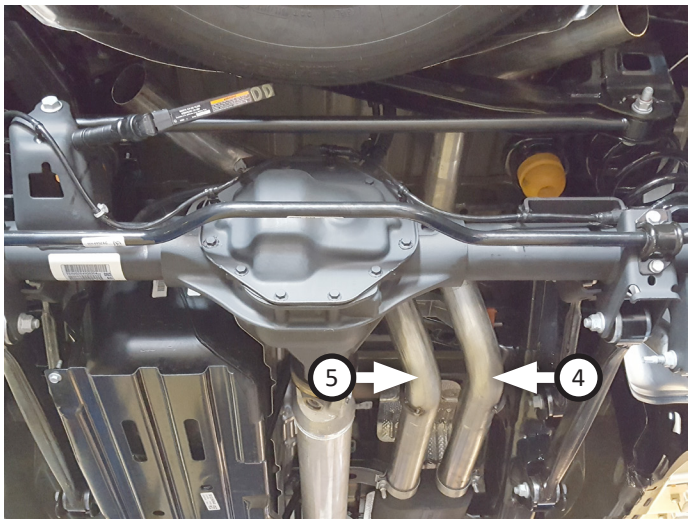

13. Place (x2 ea.) **clamps (12)** and **90° hangers (11)** onto **right rear (6)** and **left rear tailpipes (7).**

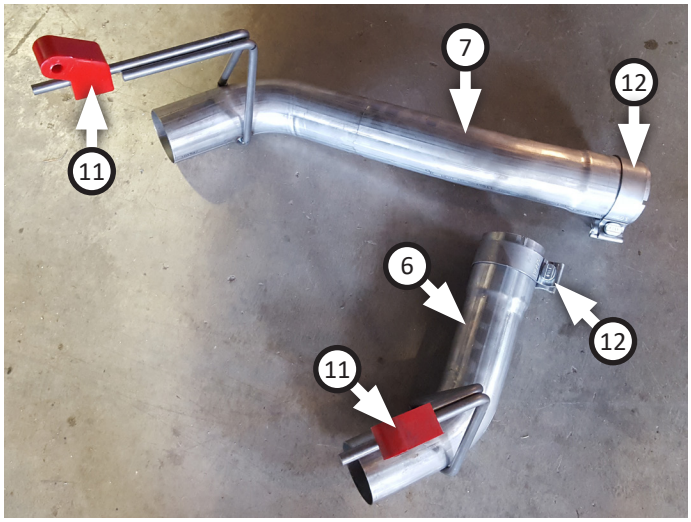

14. Connect right and left rear tailpipes to front tailpipes, then rotate them and to insert hangers. Tighten clamps just enough to allow for later adjustment.

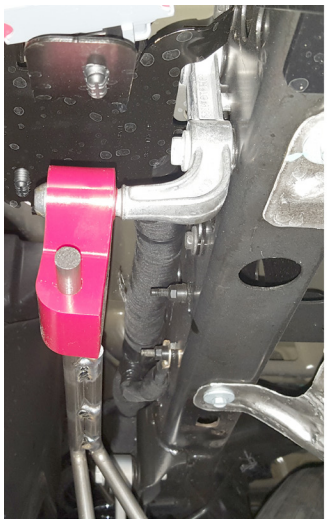

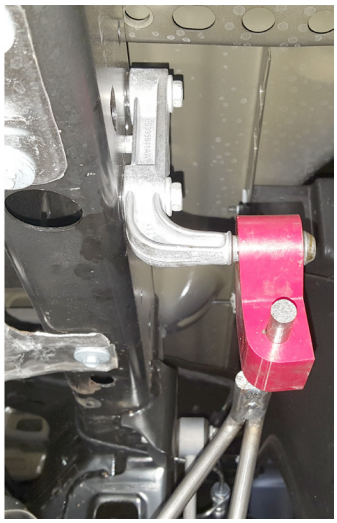

NOTE: This kit can be a side or rear exit exhaust. Side exit is preferable for towing purposes, to avoid blowing fumes in or on vehicles you may be towing (eg: RV trailer, boat, etc). If you prefer, use **side exit (8)** instead of rear exit pipes.

15. Place (x2 ea.) **clamps (12)** onto **rear exit pipes (9)** then connect them to tailpipes and tighten clamps just enough to allow for later adjustment.
16. Place (x2) **tips (10)** onto exit pipes and tighten inlets, then rotate them to desired distance from body or bumper, so angle cut on tips are properly positioned.

---

17. Adjust exhaust components for fit; maintaining ½" clearance and compensating for suspension, travel and vibration, then tighten all clamps.
18. Secure exhaust system by fitting (x3) **hanger keepers (17)** onto each wire hanger that runs perpendicular to your vehicles axle.
19. Recommended: Secure slip-fit connections with a 1-inch tack weld then spray high-temp paint over each weld to prevent rust and premature corrosion.

Congratulations, the installation of your FLOWMASTER performance exhaust system is now complete!

FLOWMASTER INC.
THE PERFORMANCE TECHNOLOGY COMPANY

Installation Diagram

817936

2019*-2024, 2026-2027 RAM 1500
5.7L ENGINE

2/4 Wheel Drive & All Wheelbases
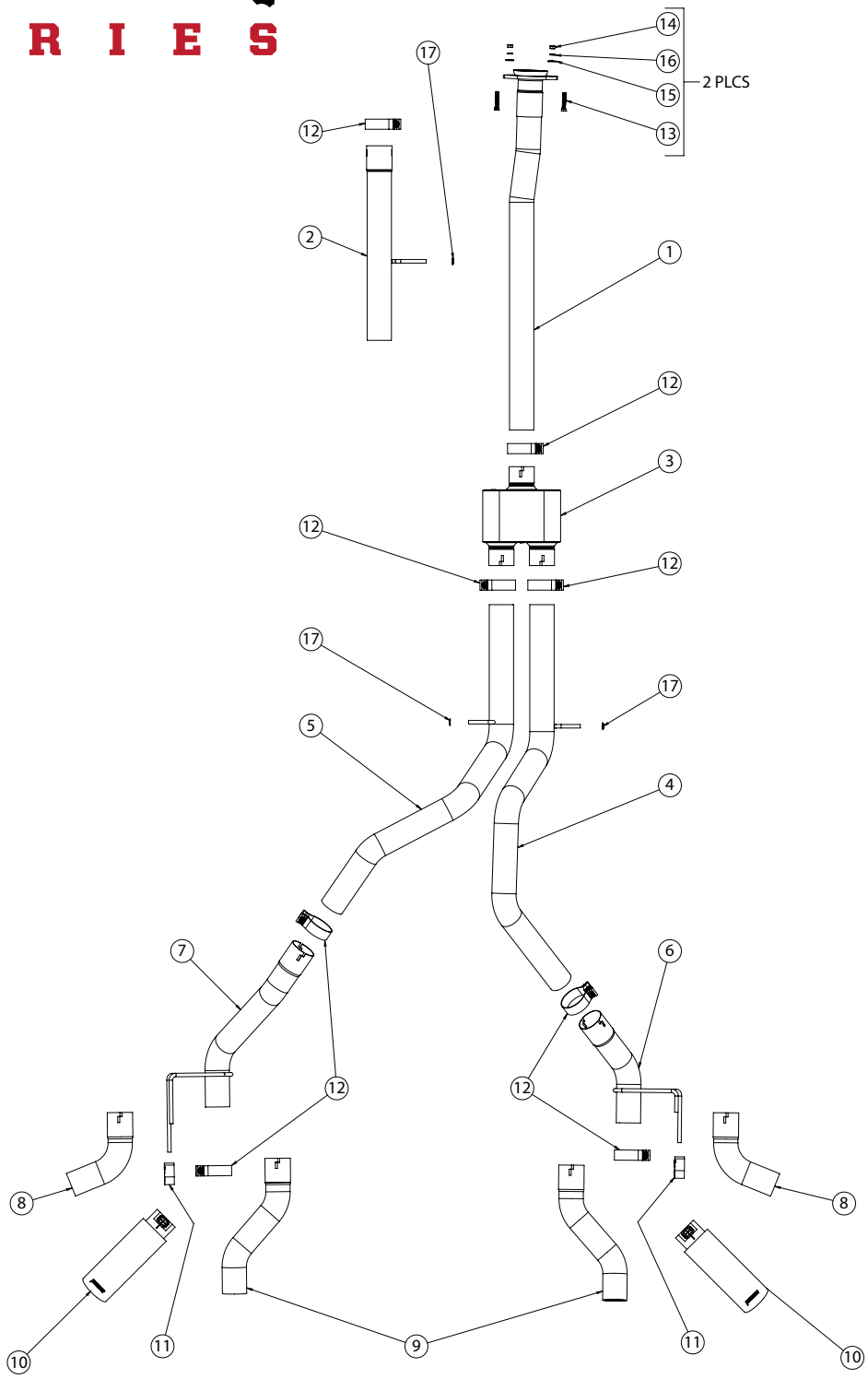
*New body only, does NOT fit 2019 Classic body RAM.