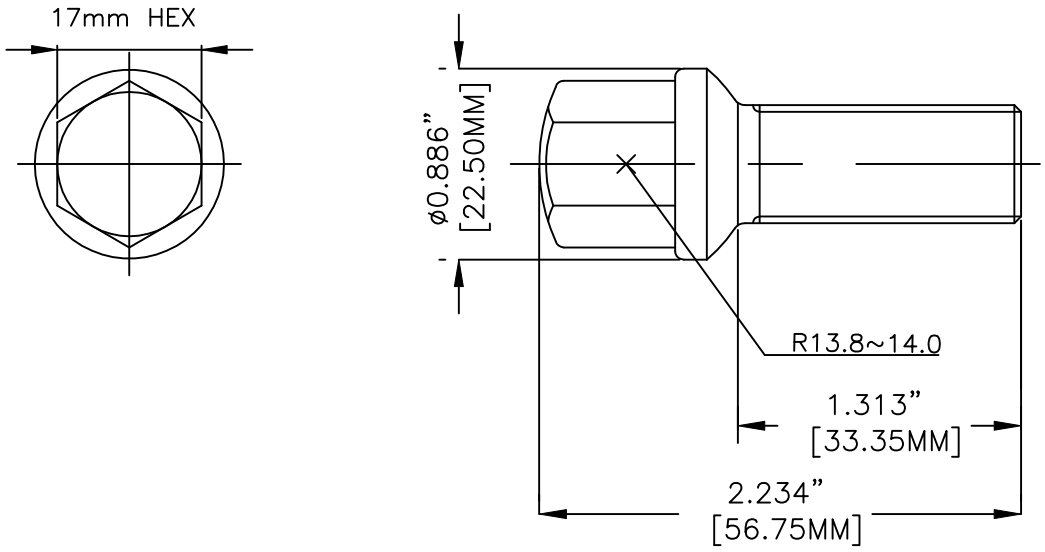
17mm HEX
ø0.886"
[22.50MM]
R13.8~14.0
1.313"
[33.35MM]
2.234"
[56.75MM]