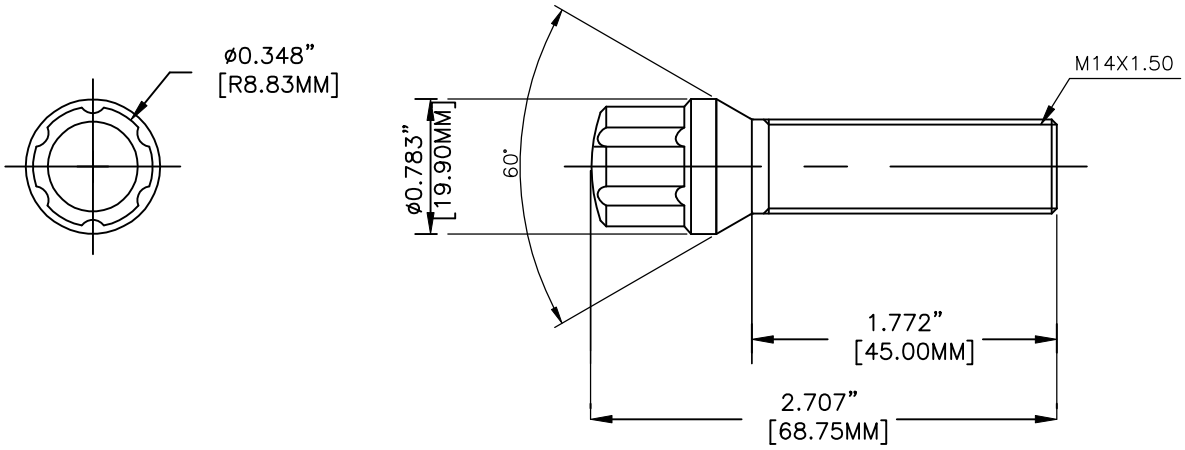
ø0.348"
[R8.83MM]
ø0.783"
[19.90MM]
60°
M14X1.50
1.772"
[45.00MM]
2.707"
[68.75MM]